# THERMALLOY D type
## (solid lubricant dispersal bearing)

Pb Free RoHS ELV



We offer bronze alloys as a standard material for THERMALLOY D type and also standard parts such as finished bushings. Lead-bronze products are only made to order and do not comply with RoHS or ELV restrictions.

### Physical Properties

| Material Symbol | Contents (Metal) | Carbon Amount | Density | Hardness | Compressive Strength | Max. Operating Temperature | Coefficient of Linear Thermal Expansion |
|---|---|---|---|---|---|---|---|
| B1/6 | Cu-Sn | 6wt% | 7.0g/cm³ | Hv65 | 324MPa | 200°C | $18\times10^{-6}$/°C |
| B1/8 | Cu-Sn | 8 | 6.6 | 60 | 245 | | |

### Bearing Characteristics

| Alloy | Bronze | |
|---|---|---|
| Material Symbol | B1/6 | B1/8 |
| Bearing Pressure MPa | 10～30 | 1～10 |
| Allowable Sliding Speed m/min | 4.2 m/min for 10 MPa<br>1.0 m/min for 30 MPa | 72.0 m/min for 1 MPa<br>9.0 m/min for 10 MPa |
| Wear Amount per Friction Distance of 1 km | 9μm (2MPa・3.0m/min) | 6μm (2MPa・3.0m/min) |
| Hardness of Mating Surface | Above HB200 | |

・The above mentioned bearing pressure is the value given at normal clearance. If the bearing is used with extremely large clearance, apply a lower bearing pressure.
・The relationship between the bearing pressure and allowable sliding speed is decided through a balance of heat generation and heat radiation in the bearing.
・The amount of wear is affected by bearing pressure, sliding speed and the roughness of the shaft.

## Material Dimension Table

(Unit: mm)

| Dimension Part Number | O.D. | I.D. | Length $^{+4}_{0}$ | Material Code |
|---|---|---|---|---|
| BR12-20DM | 12.50 | – | 20 | B1/6・B1/8 |
| BR20-40DM | 20.45 | – | 40 | B1/6・B1/8 |
| BR30-50DM | 30.55 | – | 50 | B1/6・B1/8 |
| BR45-50DM | 45.75 | – | 50 | B1/8 Only |
| BR45-60DM | 45.75 | – | 60 | B1/6 Only |
| TU20- 8-30DM | 20.45 | 7.00 | 30 | B1/6・B1/8 |
| TU25-15-30DM | 25.55 | 14.10 | 30 | B1/6・B1/8 |
| TU30-15-50DM | 30.55 | 14.10 | 50 | B1/6・B1/8 |
| TU30-20-40DM | 30.55 | 19.00 | 40 | B1/6・B1/8 |
| TU35-25-40DM | 35.60 | 24.00 | 40 | B1/6・B1/8 |
| TU40-20-50DM | 40.60 | 19.00 | 50 | B1/8 Only |
| TU40-20-60DM | 40.60 | 19.00 | 60 | B1/6 Only |
| TU40-30-40DM | 40.60 | 29.00 | 40 | B1/6・B1/8 |
| TU45-25-50DM | 45.75 | 24.00 | 50 | B1/8 Only |
| TU45-25-60DM | 45.75 | 24.00 | 60 | B1/6 Only |
| TU45-35-40DM | 45.75 | 34.05 | 40 | B1/6・B1/8 |
| TU50-30-50DM | 50.60 | 29.00 | 50 | B1/8 Only |
| TU50-30-60DM | 50.60 | 29.00 | 60 | B1/6 Only |
| TU50-40-40DM | 50.60 | 39.25 | 40 | B1/6・B1/8 |
| TU55-45-50DM | 55.60 | 44.05 | 50 | B1/6・B1/8 |
| TU60-40-50DM | 60.95 | 39.25 | 50 | B1/8 Only |
| TU60-40-60DM | 60.95 | 39.25 | 60 | B1/6 Only |
| TU60-50-50DM | 60.95 | 49.05 | 50 | B1/6・B1/8 |
| TU65-55-50DM | 65.65 | 54.05 | 50 | B1/6・B1/8 |
| TU70-55-50DM | 70.65 | 54.05 | 50 | B1/8 Only |
| TU70-55-60DM | 70.65 | 54.05 | 60 | B1/6 Only |
| TU75-60-50DM | 75.65 | 59.05 | 50 | B1/6・B1/8 |

Note: When ordering, please specify the material code and dimension number (example: "B1/6 TU40-30-40DM").

APPLICATION
MANUFACTURE
MATERIALS AND SIZE Polymer Metallic
PLANNING
CORPORATE PROFILE
SPECIFICATION SHEET

# DM D type DM Series (Bushing Inner Diameter: 10 to 100 mm)

**Designation of Part Number**

DM ○○ ○○ ○○

- Bushing Length
- Bushing O.D.
- Bushing I.D.
- Product Symbol (Material B1/8)

Pb Free

RoHS

ELV

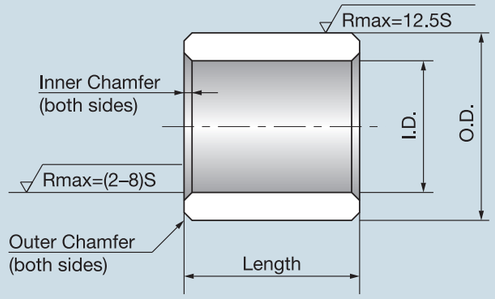


①If products with a shorter length are required, adjust the dimension of the length to suit.
②If products with a longer length are required use multiple pieces as shown in the figure below.

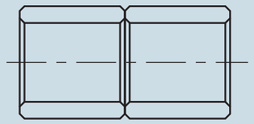

Multiple bushes

**(Bushing Inner Diameter: 10 to 100 mm)**

**DM 101610**

Please specify by part number.

(Unit: mm)

| Bushing I.D. | Recommended Dimension Mating Part: Housing I.D. | Recommended Dimension Mating Part: Shaft Dia. | Bushing Dimensions: O.D. | Bushing Dimensions: Wall Thickness | Part Number & Bushing Length Tolerance $^{0}_{-0.3}$ | | | | | | | | | | Chamfer on O.D. | Chamfer on I.D. | Bushing I.D. |
|---|---|---|---|---|---|---|---|---|---|---|---|---|---|---|---|---|---|
| | | | | | 10 | 15 | 16 | 20 | | 25 | 30 | 35 | 40 | 50 | | | |
| 10 | $\phi16H7\,^{+0.018}_{0}$ | $\phi10h7\,^{0}_{-0.015}$ | $\phi10C7\,^{+0.095}_{+0.080}$ | $\phi16r6\,^{+0.034}_{+0.023}$ | 101610 | 101615 | | 101620 | | | | | | | C0.3 | C0.3 | 10 |
| 12 | $\phi18H7\,^{+0.018}_{0}$ | $\phi12h7\,^{0}_{-0.018}$ | $\phi12C7\,^{+0.113}_{+0.095}$ | $\phi18r6\,^{+0.034}_{+0.023}$ | 121810 | 121815 | 121816 | 121820 | | 121825 | 121830 | | | | C0.3 | C0.3 | 12 |
| 13 | $\phi19H7\,^{+0.021}_{0}$ | $\phi13h7\,^{0}_{-0.018}$ | $\phi13C7\,^{+0.113}_{+0.095}$ | $\phi19r6\,^{+0.041}_{+0.028}$ | | 131915 | | 131920 | | | | | | | C0.3 | C0.3 | 13 |
| 14 | $\phi20H7\,^{+0.021}_{0}$ | $\phi14h7\,^{0}_{-0.018}$ | $\phi14C7\,^{+0.113}_{+0.095}$ | $\phi20r6\,^{+0.041}_{+0.028}$ | | 142015 | | 142020 | | | | | | | C0.3 | C0.3 | 14 |
| 15 | $\phi21H7\,^{+0.021}_{0}$ | $\phi15h7\,^{0}_{-0.018}$ | $\phi15C7\,^{+0.113}_{+0.095}$ | $\phi21r6\,^{+0.041}_{+0.028}$ | | 152115 | | 152120 | | 152125 | | | | | C0.3 | C0.3 | 15 |
| 16 | $\phi22H7\,^{+0.021}_{0}$ | $\phi16h7\,^{0}_{-0.018}$ | $\phi16C7\,^{+0.113}_{+0.095}$ | $\phi22r6\,^{+0.041}_{+0.028}$ | | 162215 | 162216 | 162220 | | 162225 | 162230 | 162235 | | | C0.3 | C0.3 | 16 |
| 18 | $\phi24H7\,^{+0.021}_{0}$ | $\phi18h7\,^{0}_{-0.018}$ | $\phi18C7\,^{+0.113}_{+0.095}$ | $\phi24r6\,^{+0.041}_{+0.028}$ | | 182415 | | 182420 | | 182425 | 182430 | | | | C0.5 | C0.5 | 18 |
| 20 | $\phi28H7\,^{+0.021}_{0}$ | $\phi20h7\,^{0}_{-0.021}$ | $\phi20C7\,^{+0.131}_{+0.110}$ | $\phi28r6\,^{+0.041}_{+0.028}$ | | 202815 | 202816 | 202820 | | 202825 | 202830 | 202835 | 202840 | | C0.5 | C0.5 | 20 |
| 20 | $\phi30H7\,^{+0.021}_{0}$ | $\phi20h7\,^{0}_{-0.021}$ | $\phi20C7\,^{+0.131}_{+0.110}$ | $\phi30r6\,^{+0.041}_{+0.028}$ | | | | 203020 | | 203025 | 203030 | 203035 | 203040 | | C0.5 | C0.5 | 20 |
| 22 | $\phi30H7\,^{+0.021}_{0}$ | $\phi22h7\,^{0}_{-0.021}$ | $\phi22C7\,^{+0.131}_{+0.110}$ | $\phi30r6\,^{+0.041}_{+0.028}$ | | | | 223020 | | 223025 | 223030 | | | | C0.5 | C0.5 | 22 |
| 25 | $\phi33H7\,^{+0.025}_{0}$ | $\phi25h7\,^{0}_{-0.021}$ | $\phi25C7\,^{+0.131}_{+0.110}$ | $\phi33r6\,^{+0.050}_{+0.034}$ | | | 253316 | 253320 | | 253325 | 253330 | 253335 | 253340 | | C0.5 | C0.5 | 25 |
| 25 | $\phi35H7\,^{+0.025}_{0}$ | $\phi25h7\,^{0}_{-0.021}$ | $\phi25C7\,^{+0.131}_{+0.110}$ | $\phi35r6\,^{+0.050}_{+0.034}$ | | | | 253520 | | 253525 | 253530 | 253535 | 253540 | | C0.5 | C0.5 | 25 |
| 28 | $\phi38H7\,^{+0.025}_{0}$ | $\phi28h7\,^{0}_{-0.021}$ | $\phi28C7\,^{+0.131}_{+0.110}$ | $\phi38r6\,^{+0.050}_{+0.034}$ | | | | 283820 | | | 283830 | | | | C0.5 | C0.5 | 28 |
| 30 | $\phi38H7\,^{+0.025}_{0}$ | $\phi30h7\,^{0}_{-0.021}$ | $\phi30C7\,^{+0.131}_{+0.110}$ | $\phi38r6\,^{+0.050}_{+0.034}$ | | | | 303820 | | 303825 | 303830 | 303835 | 303840 | 303850 | C0.5 | C0.5 | 30 |
| 30 | $\phi40H7\,^{+0.025}_{0}$ | $\phi30h7\,^{0}_{-0.021}$ | $\phi30C7\,^{+0.131}_{+0.110}$ | $\phi40r6\,^{+0.050}_{+0.034}$ | | | | 304020 | | 304025 | 304030 | 304035 | 304040 | 304050 | C0.5 | C0.5 | 30 |
| | | | | | 15 | 16 | 20 | 25 | | 30 | 35 | 40 | 50 | 60 | | | |
| 31.5 | $\phi40H7\,^{+0.025}_{0}$ | $\phi31.5h7\,^{0}_{-0.025}$ | $\phi31.5C7\,^{+0.095}_{+0.080}$ | $\phi40r6\,^{+0.050}_{+0.034}$ | | | | | | 314030 | | 314040 | | | C0.5 | C0.5 | 31.5 |
| 32 | $\phi42H7\,^{+0.025}_{0}$ | $\phi32h7\,^{0}_{-0.025}$ | $\phi32C7\,^{+0.113}_{+0.095}$ | $\phi42r6\,^{+0.050}_{+0.034}$ | | | | 324225 | | 324230 | | 324240 | | | C0.5 | C0.5 | 32 |
| 35 | $\phi44H7\,^{+0.025}_{0}$ | $\phi35h7\,^{0}_{-0.025}$ | $\phi35C7\,^{+0.113}_{+0.095}$ | $\phi44r6\,^{+0.050}_{+0.034}$ | | | | | | 354430 | 354435 | 354440 | 354450 | | C0.5 | C0.5 | 35 |
| 35 | $\phi45H7\,^{+0.025}_{0}$ | $\phi35h7\,^{0}_{-0.025}$ | $\phi35C7\,^{+0.113}_{+0.095}$ | $\phi45r6\,^{+0.050}_{+0.034}$ | | | | | | 354530 | 354535 | 354540 | 354550 | | C0.5 | C0.5 | 35 |
| 40 | $\phi50H7\,^{+0.025}_{0}$ | $\phi40h7\,^{0}_{-0.025}$ | $\phi40C7\,^{+0.113}_{+0.095}$ | $\phi50r6\,^{+0.050}_{+0.034}$ | | | 405020 | 405025 | | 405030 | 405035 | 405040 | 405050 | | C0.5 | C0.5 | 40 |
| 45 | $\phi55H7\,^{+0.030}_{0}$ | $\phi45h7\,^{0}_{-0.025}$ | $\phi45C7\,^{+0.113}_{+0.095}$ | $\phi55r6\,^{+0.060}_{+0.041}$ | | | | | | | | 455540 | 455550 | | C0.5 | C0.5 | 45 |
| 50 | $\phi60H7\,^{+0.030}_{0}$ | $\phi50h7\,^{0}_{-0.025}$ | $\phi50C7\,^{+0.113}_{+0.095}$ | $\phi60r6\,^{+0.060}_{+0.041}$ | | | | | | | | 506040 | 506050 | 506060 | C0.5 | C0.5 | 50 |
| 55 | $\phi65H7\,^{+0.030}_{0}$ | $\phi55h7\,^{0}_{-0.030}$ | $\phi55C7\,^{+0.131}_{+0.110}$ | $\phi65r6\,^{+0.060}_{+0.041}$ | | | | | | | | 556540 | | 556560 | C0.5 | C0.5 | 55 |
| 60 | $\phi75H7\,^{+0.030}_{0}$ | $\phi60h7\,^{0}_{-0.030}$ | $\phi60C7\,^{+0.131}_{+0.110}$ | $\phi75r6\,^{+0.062}_{+0.043}$ | | | | | | | | 607540 | | 607560 | C0.5 | C0.5 | 60 |
| 65 | $\phi80H7\,^{+0.030}_{0}$ | $\phi65h7\,^{0}_{-0.030}$ | $\phi65C7\,^{+0.131}_{+0.110}$ | $\phi80r6\,^{+0.062}_{+0.043}$ | | | | | | | | 658040 | | 658060 | C1.0 | C1.0 | 65 |
| 70 | $\phi85H7\,^{+0.035}_{0}$ | $\phi70h7\,^{0}_{-0.030}$ | $\phi70C7\,^{+0.131}_{+0.110}$ | $\phi85r6\,^{+0.073}_{+0.051}$ | | | | | | | | 708540 | | 708560 | C1.0 | C1.0 | 70 |
| 75 | $\phi90H7\,^{+0.035}_{0}$ | $\phi75h7\,^{0}_{-0.030}$ | $\phi75C7\,^{+0.131}_{+0.110}$ | $\phi90r6\,^{+0.073}_{+0.051}$ | | | | | | | | 759040 | | 759060 | C1.0 | C1.0 | 75 |
| 80 | $\phi100H7\,^{+0.035}_{0}$ | $\phi80h7\,^{0}_{-0.030}$ | $\phi80C7\,^{+0.131}_{+0.110}$ | $\phi100r6\,^{+0.073}_{+0.051}$ | | | | | | | | 8010040 | | 8010060 | C1.0 | C1.0 | 80 |
| 85 | $\phi105H7\,^{+0.035}_{0}$ | $\phi85h7\,^{0}_{-0.035}$ | $\phi85C7\,^{+0.131}_{+0.110}$ | $\phi105r6\,^{+0.076}_{+0.054}$ | | | | | | | | 8510540 | | 8510560 | C1.0 | C1.0 | 85 |
| 90 | $\phi110H7\,^{+0.035}_{0}$ | $\phi90h7\,^{0}_{-0.035}$ | $\phi90C7\,^{+0.131}_{+0.110}$ | $\phi110r6\,^{+0.076}_{+0.054}$ | | | | | | | | 9011040 | | 9011060 | C1.0 | C1.0 | 90 |
| 100 | $\phi120H7\,^{+0.035}_{0}$ | $\phi100h7\,^{0}_{-0.035}$ | $\phi100C7\,^{+0.131}_{+0.110}$ | $\phi120r6\,^{+0.076}_{+0.054}$ | | | | | | | | 10012040 | | 10012060 | C1.0 | C1.0 | 100 |

# GB-C D type C Series (Bushing Inner Diameter: 6 to 50 mm)

**Designation of Part Number**

**GB-C 00 00**

- 00 — Bushing Length
- 00 — Bushing I.D.
- GB-C — Product Symbol (Material B1/8)

**GB-C 0606**

Please specify by part number.

Pb Free

RoHS

ELV

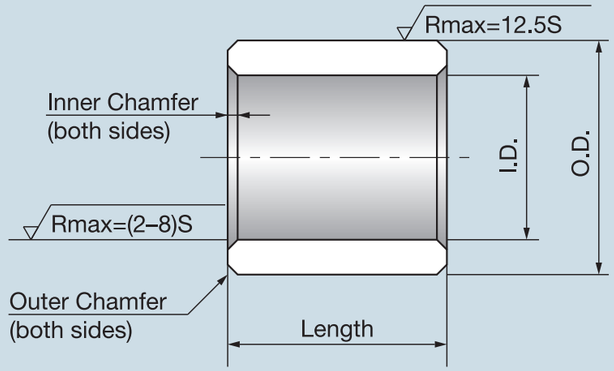


(Unit: mm)

| Bushing I.D. | Recommended Dimension Mating Part: Houshing I.D. | Recommended Dimension Mating Part: Shaft Dia. | Bushing Dimensions: O.D. | Bushing Dimensions: Wall Thickness | Part Number & Bushing Length Tolerance $^{0}_{-0.3}$: 6 | 8 | 10 | 12 | 16 | 20 | 25 | 30 | 35 | 40 | 45 | 50 | 55 | 60 | Chamfer on O.D. | Chamfer on I.D. | Bushing I.D. |
|---|---|---|---|---|---|---|---|---|---|---|---|---|---|---|---|---|---|---|---|---|---|
| 6 | $\phi10H7\ ^{+0.015}_{0}$ | $\phi6g6\ ^{-0.004}_{-0.012}$ | $\phi6\ ^{+0.028}_{+0.013}$ | $\phi10\ ^{+0.021}_{+0.006}$ | **0606** | **0608** | **0610** | | | | | | | | | | | | C0.3 | C0.3 | 6 |
| 8 | $\phi14H7\ ^{+0.018}_{0}$ | $\phi8g6\ ^{-0.005}_{-0.014}$ | $\phi8\ ^{+0.028}_{+0.013}$ | $\phi14\ ^{+0.021}_{+0.006}$ | | **0808** | **0810** | **0812** | **0816** | | | | | | | | | | C0.3 | C0.3 | 8 |
| 10 | $\phi16H7\ ^{+0.018}_{0}$ | $\phi10g6\ ^{-0.005}_{-0.014}$ | $\phi10\ ^{+0.034}_{+0.016}$ | $\phi16\ ^{+0.021}_{+0.006}$ | | | **1010** | **1012** | **1016** | **1020** | | | | | | | | | C0.3 | C0.3 | 10 |
| 12 | $\phi18H7\ ^{+0.018}_{0}$ | $\phi12g6\ ^{-0.006}_{-0.017}$ | $\phi12\ ^{+0.034}_{+0.016}$ | $\phi18\ ^{+0.021}_{+0.006}$ | | | **1210** | **1212** | **1216** | **1220** | | | | | | | | | C0.3 | C0.3 | 12 |
| 16 | $\phi22H7\ ^{+0.021}_{0}$ | $\phi16g6\ ^{-0.006}_{-0.017}$ | $\phi16\ ^{+0.034}_{+0.016}$ | $\phi22\ ^{+0.021}_{+0.006}$ | | | | | **1616** | **1620** | **1625** | | | | | | | | C0.3 | C0.3 | 16 |
| 20 | $\phi30H7\ ^{+0.021}_{0}$ | $\phi20g6\ ^{-0.007}_{-0.020}$ | $\phi20\ ^{+0.041}_{+0.020}$ | $\phi30\ ^{+0.021}_{+0.006}$ | | | | | **2016** | **2020** | **2025** | **2030** | | | | | | | C0.5 | C0.5 | 20 |
| 25 | $\phi35H7\ ^{+0.025}_{0}$ | $\phi25g6\ ^{-0.007}_{-0.020}$ | $\phi25\ ^{+0.041}_{+0.020}$ | $\phi35\ ^{+0.025}_{+0.009}$ | | | | | | **2520** | **2525** | **2530** | | | | | | | C0.5 | C0.5 | 25 |
| 30 | $\phi40H7\ ^{+0.025}_{0}$ | $\phi30g6\ ^{-0.007}_{-0.020}$ | $\phi30\ ^{+0.041}_{+0.020}$ | $\phi40\ ^{+0.025}_{+0.009}$ | | | | | | **3020** | **3025** | **3030** | **3035** | **3040** | | | | | C0.5 | C0.5 | 30 |
| 35 | $\phi45H7\ ^{+0.025}_{0}$ | $\phi35g6\ ^{-0.009}_{-0.025}$ | $\phi35\ ^{+0.050}_{+0.025}$ | $\phi45\ ^{+0.025}_{+0.009}$ | | | | | | | | **3530** | **3535** | **3540** | **3545** | **3550** | | | C0.5 | C0.5 | 35 |
| 40 | $\phi50H7\ ^{+0.025}_{0}$ | $\phi40g6\ ^{-0.009}_{-0.025}$ | $\phi40\ ^{+0.050}_{+0.025}$ | $\phi50\ ^{+0.025}_{+0.009}$ | | | | | | | | **4030** | **4035** | **4040** | **4045** | **4050** | | | C0.5 | C0.5 | 40 |
| 45 | $\phi55H7\ ^{+0.030}_{0}$ | $\phi45g6\ ^{-0.009}_{-0.025}$ | $\phi45\ ^{+0.050}_{+0.025}$ | $\phi55\ ^{+0.033}_{+0.011}$ | | | | | | | | | | **4540** | **4545** | **4550** | | | C0.5 | C0.5 | 45 |
| 50 | $\phi62H7\ ^{+0.030}_{0}$ | $\phi50g6\ ^{-0.009}_{-0.025}$ | $\phi50\ ^{+0.050}_{+0.025}$ | $\phi62\ ^{+0.033}_{+0.011}$ | | | | | | | | | | **5040** | **5045** | **5050** | **5055** | **5060** | C0.5 | C0.5 | 50 |

# THERMALLOY T type
## (solid lubricant dispersal bearing)

Pb Free RoHS ELV
Excluding products marked ※



### Material Characteristics

| | Material Symbol | | Operating Temperature °C | Max. Bearing Pressure | Max. Sliding Speed | Description |
|---|---|---|---|---|---|---|
| | Powder Carbon | Granulate Carbon | | | | |
| ※ Lead Bronze Alloy | 30/6<br>30/8<br>30/12 | 30/8P<br>30/12P | –50～+200 | 49.0MPa<br>29.4<br>4.9 | 1.2m/min<br>30.0<br>60.0 | Lead added bronze. General purpose material for use in air or water |
| Bronze Alloy | 144SB6<br>144SB8<br>144SB12 | 144SB8P<br>144SB12P | | 49.0<br>29.4<br>4.9 | 1.2<br>30.0<br>60.0 | Bronze with no lead added so can be used in food factory machinery. Can also be used in pure water |
| Special Bronze Alloy | 144SB6W<br>144SB8W<br>144SB12W | 144SB8PW<br>144SB12PW | –200～+350 | 39.2<br>19.6<br>2.9 | 1.2<br>30.0<br>60.0 | Copper alloy which has excellent dimensional stability |
| Nickel-Copper -Iron Alloy | 277NC8W<br>277NC12W<br>653NC8W | | ～+450<br>〃<br>～+550 | 19.6<br>4.9<br>19.6 | 2.4<br>30.0<br>2.4 | Excellent corrosion resistance, particularly in sea water |
| Iron Alloy | 963/8W | | ～+600 | 19.6 | 2.4 | Used when oxidisation of the bearing is a problem |
| Nickel Alloy | Ni98/8W<br>Ni98/12W | | ～+600 | 19.6<br>4.9 | 2.4<br>18.0 | Used for bearings for atomic energy related and anti-radiation use. Has good corrosion resistance and operation in liquid is preferable. |
| Iron Nickel Alloy | 831FN10W | 831FN12PW | ～+700 | 39.2 | 1.2 | High temperature properties are good, strength is excellent. |
| | 237NF10W | | | 39.2 | | High temperature and corrosion resistance properties are excellent. |

Note:
・The values given for maximum bearing pressure and maximum sliding speed are merely for guidance, and may vary dependant on other conditions. In addition, usage of the bearing at both maximum bearing pressure and maximum sliding speed is likely to cause heat generation and wear.
・Special material is prepared for use in a vacuum. Please consult us for more information.
・For usage below 200℃ the W symbol is required only on lead-bronze alloy or bronze alloy materials.

### Important Notes on the Determination of Material Codes

①Each material code is composed of symbols that indicate the alloy series, the amount of graphite contained, and the state of graphite dispersal. When you have determined the material code from the upper table, we add a manufacturing-based classification code and indicate it on the label for the actual article and in the drawings.

**Examples**
Your selected code plus our added classification code.
30/8 -> 30/8-2Mo

**Meaning of the code**
In this example, "30/" is the alloy series, "8"is the percentage of powdered graphite, and "2Mo" is a code we add.
144SB12PW -> 144SB12P-2MoW
In this example, "144SBW" is the alloy series, "12P"is the percentage of powdered graphite, and "2Mo" is a code we add.

②The amount of graphite contained is normally 6%, 8%, 10%, or 12%.
③A powdered-graphite value of 8% and a granulated-graphite value of 12% (indicated by a "P" code) are nearly equivalent in terms of strength, and have an identical maximum specific load. Powdered graphite is effective in situations where contamination by external foreign matter does not occur, and granulated graphite is effective in situations susceptible to contamination by sand, iron filings, or the like.



## Material Dimension Table (All Parts with Chamfering Margin)

(Unit: mm)

| Die No. | Outer diameter | Inner diameter | Length | Length | Length | Length | Remarks |
|---|---|---|---|---|---|---|---|
| B20 | 22 | – | | | | – | *1<br>For powdered graphite and lead-bronze, bronze, and special bronze alloys of B40 up to B120, values of up to 84ℓ are possible.<br>For other than the above, values are up to 64ℓ.<br>For granulated graphite, values are up to 64ℓ for all dies. |
| B30 | 32 | – | | | | – | |
| B40 | 43 | – | | | | | |
| B60 | 63 | – | 44ℓ | 54ℓ | 64ℓ | 84ℓ *1 | |
| B80 | 83 | – | | | | | |
| B100 | 103 | – | | | | | |
| B120 | 123 | – | | | | | |
| R40 | 43 | 17 | | | | – | *2<br>For powdered graphite and lead-bronze, bronze, and special bronze alloys other than R40, R50, R60B, or R70, values of up to 84ℓ are possible.<br>For other than the above, values are up to 64ℓ.<br>For granulated graphite, values are up to 64ℓ for all dies.<br>For other than the above, values are up to 64ℓ.<br>For granulated graphite, values are up to 64ℓ for all dies. |
| R50 | 52 | 23 | | | | – | |
| R60A | 63 | 27 | | | | | |
| R60B | 63 | 38 | | | | – | |
| R70 | 72 | 43 | | | | – | |
| R80A | 83 | 38 | | | | | |
| R80B | 83 | 47 | | | | | |
| R90 | 93 | 57 | | | | | |
| R100A | 103 | 47 | | | | | |
| R100B | 103 | 67 | | | | | |
| R110 | 113 | 77 | | | | | |
| R120A | 123 | 67 | | | | | |
| R120B | 123 | 87 | | | | | |
| R130A | 133 | 77 | 44ℓ | 54ℓ | 64ℓ | 84ℓ *2 | |
| R130B | 133 | 97 | | | | | |
| R140A | 143 | 87 | | | | | |
| R140B | 143 | 97 | | | | | |
| R140C | 143 | 107 | | | | | |
| R150 | 153 | 117 | | | | | |
| R160A | 163 | 107 | | | | | |
| R160B | 163 | 127 | | | | | |
| R170A | 173 | 117 | | | | | |
| R170B | 173 | 137 | | | | | |
| R180A | 183 | 137 | | | | | |
| R180B | 183 | 147 | | | | | |
| R190 | 193 | 157 | | | | | |
| R200 | 204 | 167 | | | | | |
| R220 | 224 | 186 | | | | | |
| P65 | Height 65 | Width 100 | Thickness 29 | | | | For plate material (powdered graphite) and lead-bronze, bronze, and special bronze alloys, values of up to 34T are possible. |
| P90 | 90 | 130 | 29 | | | | |

Notes:
・When ordering, please specify the material code and die dimensions.
・All granulated-graphite material other than *1 or *2 is up to 64l.

### Die Dimensions

①All T type material has cutting margins on the outer-diameter, inner-diameter, and length faces.
②The minimum cutting margin is 2–4 mm for the diameter, and in the length direction is 4 mm on a side for iron or iron-nickel alloys and about 2 mm on a side for other materials.
③The material is round bar, hollow, and oblong.
④We perform complete finishing before delivery. Products are delivered with a grip margin in some cases.

# THERMALLOY TM type

## (solid lubricant dispersal bearing for use in ultrahigh temperatures)

Pb Free RoHS ELV

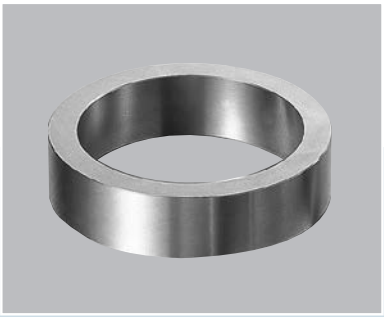



THERMALLOY TM type is made from a material that is highly resistant to oxidation and wear in high temperature oxidative environments.

### Features

① Highly resistant to oxidation and corrosion in high temperature oxidative environments (700°C max).
② Resistant to wear.
③ Highly resistant to seizure at higher temperatures.
④ The bearing causes very little damage to the mating shaft.

### Chemical Composition

FeCr + Cu + Solid lubricant

### Mechanical Properties

| Density (g/cm³) | Compressive strength (MPa) | Ring compression strength (MPa) |
|---|---|---|
| 7.4 | 1630 | 980 |

### Strength

| Temperature (°C) | Hardness (Hv) | Tensile strength (MPa) |
|---|---|---|
| Room temperature | 230 | 450 |
| 300 | 180 | 410 |
| 500 | 170 | 340 |
| 700 | 110 | 150 |

### Coefficient of Linear Thermal Expansion

| Temperature (°C) | Coefficient of linear thermal expansion ($\times 10^{-6}$/°C) |
|---|---|
| 50 – 300 | 16.5 |
| 50 – 500 | 16.6 |
| 50 – 700 | 17.0 |

### Oxidation Resistance

| Heating time (hrs.) | Weight change rate (%) |
|---|---|
| 5 | 0.01 |
| 10 | 0.05 |
| 25 | 0.05 |
| 50 | 0.05 |
| 100 | 0.06 |

### Sliding properties at higher temperatures (THERMALLOY TM type TMF2-S)

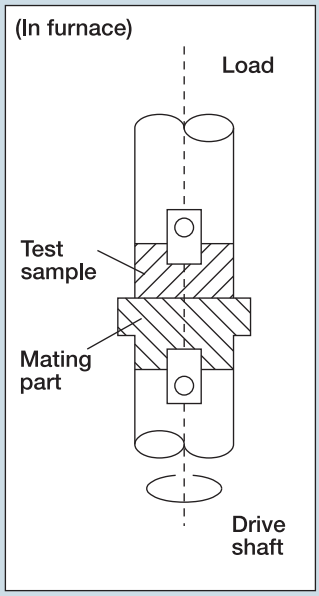


**Test conditions**

Specific load : 2.45MPa
Speed : 1.2m/min
Material of mating part : SUS303
Duration : 30min

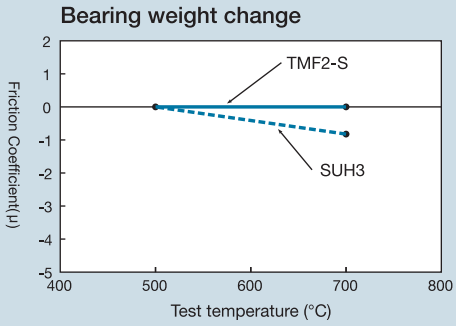


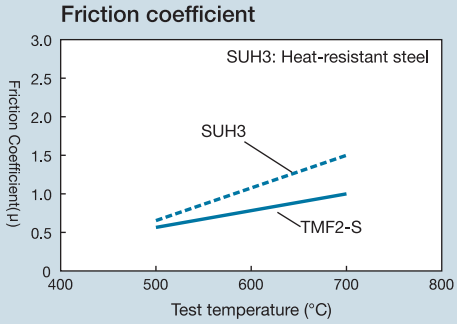


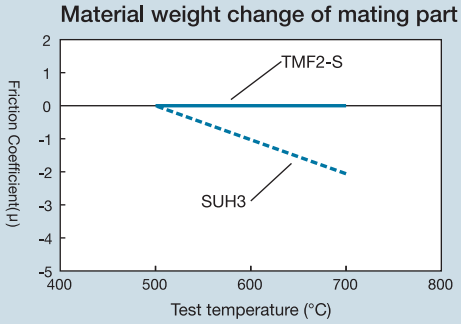

# THERMALLOY BB type
## (solid lubricant dispersal bimetal bearing)

Pb Free RoHS ELV
Excluding products marked ※

THERMALLOY BB type is a steel backed material with a D type material lining (B1/6, B1/8 or BL2/8). It is suitable for use under high loads in a limited space.
Dimensions of materials and wrapped bush for sliding plates have been standardized.

### BB type Materials

| Alloy | Material symbol | Backing |
|---|---|---|
| Bronze based | BB1/6 | Steel |
| | BB1/8 | |
| Lead bronze based | BBL2/8 | |

Optional bearings backed with stainless steel are also available.

### Standard Dimensions of Plates (Custom-made)

(Unit: mm)

| Part No. | Overall thickness | Alloy thickness | Width $^{+0.2}_{0}$ | Length $^{+5.0}_{0}$ |
|---|---|---|---|---|
| **BBL2/8-P1.5** | 1.5±0.05 | 0.4 | 70 | 500 |
| **BBL2/8-P2** | 2.0±0.05 | 0.6 | 70 | |
| **BBL2/8-P2.5** | 2.5±0.05 | 0.9 | 120 | |
| **BBL2/8-P3** | 3.0±0.05 | 1.0 | 120 | |
| **BBL2/8-P5** | 5.0±0.075 | 1.0 | 120 | |
| **BBL2/8-P8** | 8.0±0.075 | 1.3 | 110 | |

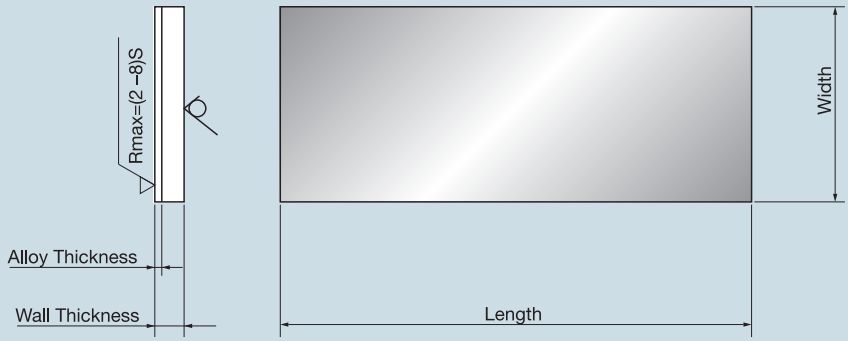

# BM BB type BM Series (Bushing Inner Diameter: 10 to 70 mm)

**Designation of Part Number**

**BM 00 00**

- Bushing Length
- Nominal I. D. of Bushing
- Product Symbol

**BM 1010**

Please specify by part number.

Pb Free

RoHS

ELV

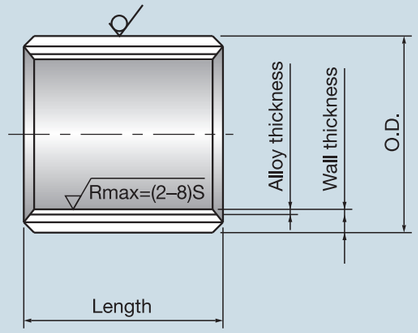


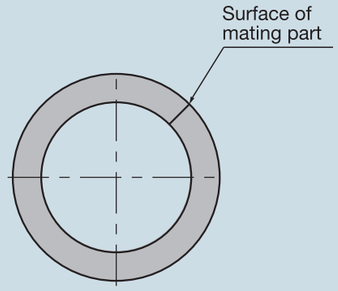


(Unit: mm)

| Bushing I.D. | Recommended Dimension Mating Part: Housing I.D. | Recommended Dimension Mating Part: Shaft Dia. | Bushing Dimensions: O.D. | Wall Thickness | Alloy Thickness | Part Number & Bushing Length Tolerance ± 0.25: 10 | 15 | 20 | 25 | | 30 | 40 | 50 | 60 | 70 | Chamfer on O.D. | Chamfer on I.D. | Bushing I.D. |
|---|---|---|---|---|---|---|---|---|---|---|---|---|---|---|---|---|---|---|
| 10 | $\phi12H7^{+0.018}_{0}$ | $\phi10h7^{0}_{-0.015}$ | $\phi12^{+0.051}_{+0.033}$ | $1.0^{-0.013}_{-0.028}$ | 0.5 | **1010** | **1015** | | | | | | | | | 0.6 x 20° | C0.2 | 10 |
| 12 | $\phi14H7^{+0.018}_{0}$ | $\phi12h7^{0}_{-0.018}$ | $\phi14^{+0.051}_{+0.033}$ | $1.0^{-0.013}_{-0.028}$ | 0.5 | **1210** | **1215** | | | | | | | | | 0.6 x 20° | C0.2 | 12 |
| 14 | $\phi16H7^{+0.018}_{0}$ | $\phi14h7^{0}_{-0.018}$ | $\phi16^{+0.051}_{+0.033}$ | $1.0^{-0.013}_{-0.028}$ | 0.5 | **1410** | **1415** | | | | | | | | | 0.6 x 20° | C0.2 | 14 |
| 15 | $\phi17H7^{+0.018}_{0}$ | $\phi15h7^{0}_{-0.018}$ | $\phi17^{+0.051}_{+0.033}$ | $1.0^{-0.013}_{-0.028}$ | 0.5 | **1510** | **1515** | | **1525** | | | | | | | 0.6 x 20° | C0.2 | 15 |
| 16 | $\phi18H7^{+0.018}_{0}$ | $\phi16h7^{0}_{-0.018}$ | $\phi18^{+0.051}_{+0.033}$ | $1.0^{-0.013}_{-0.028}$ | 0.5 | **1610** | **1615** | **1620** | **1625** | | | | | | | 0.6 x 20° | C0.2 | 16 |
| 18 | $\phi20H7^{+0.021}_{0}$ | $\phi18h7^{0}_{-0.018}$ | $\phi20^{+0.062}_{+0.041}$ | $1.0^{-0.013}_{-0.028}$ | 0.5 | **1810** | **1815** | **1820** | **1825** | | | | | | | 0.6 x 20° | C0.2 | 18 |
| 20 | $\phi23H7^{+0.021}_{0}$ | $\phi20h7^{0}_{-0.021}$ | $\phi23^{+0.062}_{+0.041}$ | $1.5^{-0.013}_{-0.033}$ | 0.5 | | **2015** | **2020** | **2025** | | **2030** | | | | | 1.0 x 20° | C0.5 | 20 |
| 22 | $\phi25H7^{+0.021}_{0}$ | $\phi22h7^{0}_{-0.021}$ | $\phi25^{+0.062}_{+0.041}$ | $1.5^{-0.013}_{-0.033}$ | 0.5 | | | | | | **2230** | | | | | 1.0 x 20° | C0.5 | 22 |
| 24 | $\phi27H7^{+0.021}_{0}$ | $\phi24h7^{0}_{-0.021}$ | $\phi27^{+0.062}_{+0.041}$ | $1.5^{-0.013}_{-0.033}$ | 0.5 | | **2415** | **2420** | **2425** | | **2430** | | | | | 1.0 x 20° | C0.5 | 24 |
| 25 | $\phi28H7^{+0.021}_{0}$ | $\phi25h7^{0}_{-0.021}$ | $\phi28^{+0.062}_{+0.041}$ | $1.5^{-0.013}_{-0.033}$ | 0.5 | | **2515** | | **2525** | | **2530** | | | | | 1.0 x 20° | C0.5 | 25 |
| 28 | $\phi32H7^{+0.025}_{0}$ | $\phi28h7^{0}_{-0.021}$ | $\phi32^{+0.073}_{+0.048}$ | $2.0^{-0.013}_{-0.033}$ | 0.6 | | | | | | **2830** | | | | | 1.0 x 20° | C0.5 | 28 |
| 30 | $\phi34H7^{+0.025}_{0}$ | $\phi30h7^{0}_{-0.021}$ | $\phi34^{+0.073}_{+0.048}$ | $2.0^{-0.013}_{-0.033}$ | 0.6 | | | **3020** | | | **3030** | **3040** | | | | 1.0 x 20° | C0.5 | 30 |
| 32 | $\phi36H7^{+0.025}_{0}$ | $\phi32h7^{0}_{-0.025}$ | $\phi36^{+0.073}_{+0.048}$ | $2.0^{-0.013}_{-0.033}$ | 0.6 | | | | | | | **3240** | | | | 1.0 x 20° | C0.5 | 32 |
| 35 | $\phi39H7^{+0.025}_{0}$ | $\phi35h7^{0}_{-0.025}$ | $\phi39^{+0.073}_{+0.048}$ | $2.0^{-0.013}_{-0.033}$ | 0.6 | | | **3520** | | | **3530** | | **3550** | | | 1.0 x 20° | C0.5 | 36 |
| 36 | $\phi40H7^{+0.025}_{0}$ | $\phi36h7^{0}_{-0.025}$ | $\phi40^{+0.073}_{+0.048}$ | $2.0^{-0.013}_{-0.033}$ | 0.6 | | | | | | | **3640** | | | | 1.0 x 20° | C0.5 | 36 |
| 38 | $\phi42H7^{+0.025}_{0}$ | $\phi38h7^{0}_{-0.025}$ | $\phi42^{+0.079}_{+0.054}$ | $2.0^{-0.013}_{-0.033}$ | 0.6 | | | | | | | **3840** | | | | 1.0 x 20° | C0.5 | 38 |
| 40 | $\phi44H7^{+0.025}_{0}$ | $\phi40h7^{0}_{-0.025}$ | $\phi44^{+0.079}_{+0.054}$ | $2.0^{-0.013}_{-0.033}$ | 0.6 | | | **4020** | | | **4030** | | **4050** | | | 1.0 x 20° | C0.5 | 40 |
| 42 | $\phi46H7^{+0.025}_{0}$ | $\phi42h7^{0}_{-0.025}$ | $\phi46^{+0.079}_{+0.054}$ | $2.0^{-0.013}_{-0.033}$ | 0.6 | | | | | | | | **4250** | | | 1.0 x 20° | C0.5 | 42 |
| 45 | $\phi50H7^{+0.025}_{0}$ | $\phi45h7^{0}_{-0.025}$ | $\phi50^{+0.079}_{+0.054}$ | $2.5^{-0.020}_{-0.045}$ | 0.6 | | | | | | **4530** | | **4550** | **4560** | | 1.0 x 20° | C0.5 | 45 |
| 50 | $\phi55H7^{+0.030}_{0}$ | $\phi50h7^{0}_{-0.025}$ | $\phi55^{+0.096}_{+0.066}$ | $2.5^{-0.020}_{-0.045}$ | 0.6 | | | | | | | **5040** | **5050** | **5060** | | 1.0 x 20° | C0.5 | 50 |
| 55 | $\phi60H7^{+0.030}_{0}$ | $\phi55h7^{0}_{-0.030}$ | $\phi60^{+0.096}_{+0.066}$ | $2.5^{-0.020}_{-0.045}$ | 0.6 | | | | | | | **5540** | | | | 1.0 x 20° | C0.5 | 55 |
| 60 | $\phi65H7^{+0.030}_{0}$ | $\phi60h7^{0}_{-0.030}$ | $\phi65^{+0.096}_{+0.066}$ | $2.5^{-0.020}_{-0.045}$ | 0.6 | | | | | | | **6040** | | **6060** | **6070** | 1.0 x 20° | C0.5 | 60 |
| 65 | $\phi70H7^{+0.030}_{0}$ | $\phi65h7^{0}_{-0.030}$ | $\phi70^{+0.105}_{+0.075}$ | $2.5^{-0.020}_{-0.045}$ | 0.6 | | | | | | | | **6550** | | **6570** | 1.0 x 20° | C0.5 | 65 |
| 70 | $\phi75H7^{+0.030}_{0}$ | $\phi70h7^{0}_{-0.030}$ | $\phi75^{+0.105}_{+0.075}$ | $2.5^{-0.020}_{-0.045}$ | 0.6 | | | | | | | | **7050** | | **7070** | 1.0 x 20° | C0.5 | 70 |

Notes: 1. Tolerances for length and outside diameters are determined separately for bushing with an inside diameter of $\geqq \varphi 160$.
2. When ordering, specify the alloy type (BB1/6, BB1/8 or BBL2/8) and the part number.
3. If press-fitting a BB type wrapped bush with allowance into a housing and then finishing its inside diameter, the bushing may be supplied with finishing allowance between 0.2mm and 0.3mm in diameter. Please ensure that you add "SS" after the part No. (e.g. BB1/8, BM5060SS).
4. The BBL2/8 alloy is not regulated by RoHS/ELV.

# BM BB type BM Series (Bushing Inner Diameter: 75 to 300 mm)

## Designation of Part Number

**BM 00 00**

- Bushing Length
- Nominal I. D. of Bushing
- Product Symbol

Pb Free

RoHS

ELV

**BM 1010**

Please specify by part number.

(Unit: mm)

| Bushing I.D. | Recommended Dimension Mating Part | | Bushing Dimensions | | | | | | | | | Bushing I.D. |
|---|---|---|---|---|---|---|---|---|---|---|---|---|
| | Houshing I.D. | Shaft Dia. | O.D. | Wall Thickness | Alloy Thickness | Part Number & Bushing Length Tolerance ±0.25 | | | Chamfer on O.D. | Chamfer on I.D. | |
| | | | | | | 60 | 80 | 100 | | | |
| 75 | $\phi81H7\ ^{+0.035}_{0}$ | $\phi75h7\ ^{0}_{-0.030}$ | $\phi81\ ^{+0.126}_{+0.091}$ | $3.0\ ^{-0.020}_{-0.045}$ | 0.9 | **7560** | **7580** | **75100** | 1.0 x 20° | C0.5 | 75 |
| 80 | $\phi86H7\ ^{+0.035}_{0}$ | $\phi80h7\ ^{0}_{-0.030}$ | $\phi86\ ^{+0.126}_{+0.091}$ | $3.0\ ^{-0.020}_{-0.045}$ | 0.9 | **8060** | **8080** | **80100** | 1.0 x 20° | C0.5 | 80 |
| 85 | $\phi91H7\ ^{+0.035}_{0}$ | $\phi85h7\ ^{0}_{-0.035}$ | $\phi91\ ^{+0.126}_{+0.091}$ | $3.0\ ^{-0.020}_{-0.045}$ | 0.9 | **8560** | **8580** | **85100** | 1.0 x 20° | C0.5 | 85 |
| 90 | $\phi96H7\ ^{+0.035}_{0}$ | $\phi90h7\ ^{0}_{-0.035}$ | $\phi96\ ^{+0.126}_{+0.091}$ | $3.0\ ^{-0.020}_{-0.045}$ | 0.9 | **9060** | **9080** | **90100** | 1.0 x 20° | C0.5 | 90 |
| 95 | $\phi101H7\ ^{+0.035}_{0}$ | $\phi95h7\ ^{0}_{-0.035}$ | $\phi101\ ^{+0.139}_{+0.104}$ | $3.0\ ^{-0.020}_{-0.045}$ | 0.9 | **9560** | **9580** | **95100** | 1.0 x 20° | C0.5 | 95 |
| 100 | $\phi106H7\ ^{+0.035}_{0}$ | $\phi100h7\ ^{0}_{-0.035}$ | $\phi106\ ^{+0.139}_{+0.104}$ | $3.0\ ^{-0.025}_{-0.050}$ | 0.9 | **10060** | **10080** | **100100** | 1.0 x 20° | C0.5 | 100 |
| 105 | $\phi111H7\ ^{+0.035}_{0}$ | $\phi105h7\ ^{0}_{-0.035}$ | $\phi111\ ^{+0.139}_{+0.104}$ | $3.0\ ^{-0.025}_{-0.050}$ | 0.9 | **10560** | **10580** | **105100** | 1.0 x 20° | C0.5 | 105 |
| 110 | $\phi116H7\ ^{+0.035}_{0}$ | $\phi110h7\ ^{0}_{-0.035}$ | $\phi116\ ^{+0.139}_{+0.104}$ | $3.0\ ^{-0.025}_{-0.050}$ | 0.9 | **11060** | **11080** | **110100** | 1.0 x 20° | C0.5 | 110 |
| 115 | $\phi121H7\ ^{+0.040}_{0}$ | $\phi115h7\ ^{0}_{-0.035}$ | $\phi121\ ^{+0.162}_{+0.122}$ | $3.0\ ^{-0.025}_{-0.050}$ | 0.9 | **11560** | **11580** | **115100** | 1.0 x 20° | C0.5 | 115 |
| 120 | $\phi126H7\ ^{+0.040}_{0}$ | $\phi120h7\ ^{0}_{-0.035}$ | $\phi126\ ^{+0.162}_{+0.122}$ | $3.0\ ^{-0.025}_{-0.050}$ | 0.9 | **12060** | **12080** | **120100** | 1.0 x 20° | C0.5 | 120 |
| 125 | $\phi131H7\ ^{+0.040}_{0}$ | $\phi125h7\ ^{0}_{-0.040}$ | $\phi131\ ^{+0.162}_{+0.122}$ | $3.0\ ^{-0.025}_{-0.050}$ | 0.9 | **12560** | **12580** | **125100** | 1.0 x 20° | C0.5 | 125 |
| 130 | $\phi136H7\ ^{+0.040}_{0}$ | $\phi130h7\ ^{0}_{-0.040}$ | $\phi136\ ^{+0.162}_{+0.122}$ | $3.0\ ^{-0.025}_{-0.050}$ | 0.9 | **13060** | **13080** | **130100** | 1.0 x 20° | C0.5 | 130 |
| 135 | $\phi141H7\ ^{+0.040}_{0}$ | $\phi135h7\ ^{0}_{-0.040}$ | $\phi141\ ^{+0.174}_{+0.134}$ | $3.0\ ^{-0.025}_{-0.050}$ | 0.9 | **13560** | **13580** | **135100** | 1.0 x 20° | C0.5 | 135 |
| 140 | $\phi146H7\ ^{+0.040}_{0}$ | $\phi140h7\ ^{0}_{-0.040}$ | $\phi146\ ^{+0.174}_{+0.134}$ | $3.0\ ^{-0.025}_{-0.050}$ | 0.9 | **14060** | **14080** | **140100** | 1.0 x 20° | C0.5 | 140 |
| 145 | $\phi151H7\ ^{+0.040}_{0}$ | $\phi145h7\ ^{0}_{-0.040}$ | $\phi151\ ^{+0.174}_{+0.134}$ | $3.0\ ^{-0.025}_{-0.050}$ | 0.9 | **14560** | **14580** | **145100** | 1.0 x 20° | C0.5 | 145 |
| 150 | $\phi156H7\ ^{+0.040}_{0}$ | $\phi150h7\ ^{0}_{-0.040}$ | $\phi156\ ^{+0.174}_{+0.134}$ | $3.0\ ^{-0.025}_{-0.065}$ | 0.9 | **15060** | **15080** | **150100** | 1.0 x 20° | C0.5 | 150 |
| 160 | $\phi166H7\ ^{+0.040}_{0}$ | $\phi160h7\ ^{0}_{-0.040}$ | $\phi166$ | $3.0\ ^{-0.025}_{-0.065}$ | 0.9 | **16060** | **16080** | **160100** | 1.0 x 20° | C0.5 | 160 |
| 180 | $\phi186H7\ ^{+0.046}_{0}$ | $\phi180h7\ ^{0}_{-0.040}$ | $\phi186$ | $3.0\ ^{-0.025}_{-0.065}$ | 0.9 | **18060** | **18080** | **180100** | 1.0 x 20° | C0.5 | 180 |
| 200 | $\phi206H7\ ^{+0.046}_{0}$ | $\phi200h7\ ^{0}_{-0.046}$ | $\phi206$ | $3.0\ ^{-0.025}_{-0.065}$ | 0.9 | **20060** | **20080** | **200100** | 1.0 x 20° | C0.5 | 200 |
| 220 | $\phi226H7\ ^{+0.046}_{0}$ | $\phi220h7\ ^{0}_{-0.046}$ | $\phi226$ | $3.0\ ^{-0.025}_{-0.065}$ | 0.9 | **22060** | **22080** | **220100** | 1.0 x 20° | C0.5 | 220 |
| 250 | $\phi256H7\ ^{+0.052}_{0}$ | $\phi250h7\ ^{0}_{-0.046}$ | $\phi256$ | $3.0\ ^{-0.025}_{-0.065}$ | 0.9 | **25060** | **25080** | **250100** | 1.0 x 20° | C0.5 | 250 |
| 280 | $\phi286H7\ ^{+0.052}_{0}$ | $\phi280h7\ ^{0}_{-0.052}$ | $\phi286$ | $3.0\ ^{-0.025}_{-0.065}$ | 0.9 | **28060** | **28080** | **280100** | 1.0 x 20° | C0.5 | 280 |
| 300 | $\phi306H7\ ^{+0.052}_{0}$ | $\phi300h7\ ^{0}_{-0.052}$ | $\phi306$ | $3.0\ ^{-0.025}_{-0.065}$ | 0.9 | **30060** | **30080** | **300100** | 1.0 x 20° | C0.5 | 300 |

Notes:
1. Tolerances for length and outside diameters are determined separately for bushing with an inside diameter of ≧$\phi$160.
2. When ordering, specify the alloy type (BB1/6, BB1/8 or BBL2/8) and the part number.
3. If press-fitting a BB type wrapped bush with allowance into a housing and then finishing its inside diameter, the bushing may be supplied with finishing allowance between 0.2mm and 0.3mm in diameter. Please ensure that you add "SS" after the part No. (e.g. BB1/8, BM5060SS).
4. The BBL2/8 alloy is not regulated by RoHS/ELV.

# THERMALLOY PV plate
## (solid lubricant dispersed bimetal plate)

Pb Free RoHS ELV

A bimetal sliding plate made from an alloy containing solid lubricant sintered onto a steel backing.

### Features

① Can be used without a lubricant supply.
② Capable of withstanding higher loads.
③ Can be used at high temperatures.
④ Protected from seizure to prevent damage to the surface of the mating part.
⑤ The performance is further improved with the use of a lubricant.
⑥ A variety of standard products are available for quick delivery.
⑦ The plate can be additionally machined using ordinary machinery.

### Dispersion of solid lubricant (micrograph)

A high performance, metallic bearing alloy based on bronze in which a numerous number of solid lubricant particles are uniformly dispersed.

**Structure** x30

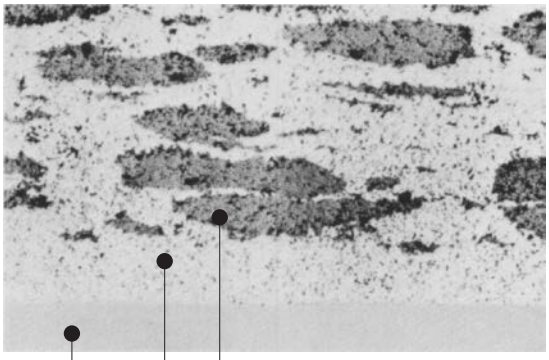


### Physical properties (alloy)

| | |
|---|---|
| Chemical composition | Cu–Sn–Gr (10% graphite by weight) |
| Density | 6.4 |
| Hardness | HB50 |
| Compressive strength | 343MPa |
| Max. service temperature | 250°C |
| Coefficient of linear thermal expansion* | $18\times10^{-6}$/°C |

*The coefficient of linear thermal expansion of the whole alloy is equivalent to that of steel.

### Bearing Characteristics

| | |
|---|---|
| Allowable max. specific load | 50MPa |
| Allowable max. speed | 6m/min |
| Max. service temperature | 250°C |
| Allowable max. PV value | 63Pa·m/min |
| Friction coefficient | 0.10 – 0.20 |

| Specific load MPa | 1 | 5 | 10 |
|---|---|---|---|
| Speed m/min | 0.6 | 3 | 0.3 |
| Wear depth (mm) per 1km of friction distance | 0.004 | 0.015 | 0.008 |

# Standard Dimensions of THERMALLOY PV plate

Designation of Part Number

H or S ○○ ○○ U or L

- Mounting method — U: Screwed from the top / L: Screwed from the bottom
- Length (L)
- Width (W)
- Plate thickness H:10mm / S:20mm

**HorS 35 100U**

Please specify by part number.

Pb Free

RoHS

ELV

Shape Type A

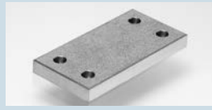

Shape Type B

Standard product shapes

Type A

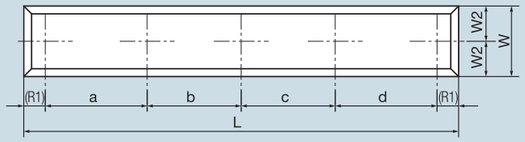


Type B

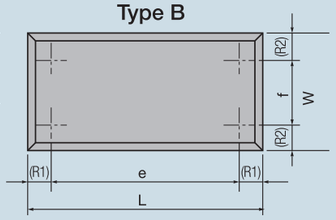


Products with a steel backing have an alloy thickness of 1.25±0.25.

(Unit: mm)

| Part No. | | Dimensions | | | Mounting Hole Pitch | | | | | | | | Mounting Hole Bolt | | Shape Type |
|---|---|---|---|---|---|---|---|---|---|---|---|---|---|---|---|
| | | Width (W) | Length (L) | Thickness (T) | a | b | c | d | e | f | $\ell_1$ | $\ell_2$ | Bolt Type | Quantity | |
| H 35 100U | | 35 | 100 | 10 | 60 | – | – | – | – | – | 20 | – | Type U: Φ9 through, Φ16 spot-faced, 6 deep | 2 | A |
| H 35 150U | | 35 | 150 | 10 | 55 | 55 | – | – | – | – | 20 | – | | 3 | A |
| H 35 200U | | 35 | 200 | 10 | 55 | 50 | 55 | – | – | – | 20 | – | | 4 | A |
| H 35 250U | | 35 | 250 | 10 | 70 | 70 | 70 | – | – | – | 20 | – | | 4 | A |
| H 35 300U | | 35 | 300 | 10 | 65 | 65 | 65 | 65 | – | – | 20 | – | | 5 | A |
| H 35 350U | | 35 | 350 | 10 | 80 | 75 | 75 | 80 | – | – | 20 | – | | 5 | A |
| S 35 100U | S 35 100L | 35 | 100 | 20 | 60 | – | – | – | – | – | 20 | – | Type U: Φ9 through, Φ14 spot-faced, 9 deep Type L: M8 tapped, 13 deep | 2 | A |
| S 35 150U | S 35 150L | 35 | 150 | 20 | 55 | 55 | – | – | – | – | 20 | – | | 3 | A |
| S 35 200U | S 35 200L | 35 | 200 | 20 | 55 | 50 | 55 | – | – | – | 20 | – | | 4 | A |
| S 35 250U | S 35 250L | 35 | 250 | 20 | 70 | 70 | 70 | – | – | – | 20 | – | | 4 | A |
| S 35 300U | S 35 300L | 35 | 300 | 20 | 65 | 65 | 65 | 65 | – | – | 20 | – | | 5 | A |
| S 35 350U | S 35 350L | 35 | 350 | 20 | 80 | 75 | 75 | 80 | – | – | 20 | – | | 5 | A |
| S 48 75U | S 48 75L | 48 | 75 | 20 | 45 | – | – | – | – | – | 15 | – | Type U: Φ11 through, Φ17.5 spot-faced, 11 deep Type L: M10 tapped, 13 deep | 2 | A |
| S 48 100U | S 48 100L | 48 | 100 | 20 | 50 | – | – | – | – | – | 25 | – | | 2 | A |
| S 48 125U | S 48 125L | 48 | 125 | 20 | 75 | – | – | – | – | – | 25 | – | | 2 | A |
| S 48 150U | S 48 150L | 48 | 150 | 20 | 100 | – | – | – | – | – | 25 | – | | 2 | A |
| S 50 75U | S 50 75L | 50 | 75 | 20 | 45 | – | – | – | – | – | 15 | – | | 2 | A |
| S 50 100U | S 50 100L | 50 | 100 | 20 | 50 | – | – | – | – | – | 25 | – | | 2 | A |
| S 50 125U | S 50 125L | 50 | 125 | 20 | 75 | – | – | – | – | – | 25 | – | | 2 | A |
| S 50 150U | S 50 150L | 50 | 150 | 20 | 100 | – | – | – | – | – | 25 | – | | 2 | A |
| S 75 75U | S 75 75L | 75 | 75 | 20 | 45 | – | – | – | – | – | 15 | – | Type U: Φ11 through, Φ17.5 spot-faced, 11 deep Type L: M10 tapped, 13 deep | 2 | A |
| S 75 100U | S 75 100L | 75 | 100 | 20 | 50 | – | – | – | – | – | 25 | – | | 2 | A |
| S 75 125U | S 75 125L | 75 | 125 | 20 | 75 | – | – | – | – | – | 25 | – | | 2 | A |
| S 75 150U | S 75 150L | 75 | 150 | 20 | 100 | – | – | – | – | – | 25 | – | | 2 | A |
| S 75 200U | S 75 200L | 75 | 200 | 20 | 150 | – | – | – | – | – | 25 | – | | 2 | A |
| S 100 100U | S 100 100L | 100 | 100 | 20 | – | – | – | – | 50 | 50 | 25 | 25 | | 4 | B |
| S 100 125U | S 100 125L | 100 | 125 | 20 | – | – | – | – | 75 | 50 | 25 | 25 | | 4 | B |
| S 100 150U | S 100 150L | 100 | 150 | 20 | – | – | – | – | 100 | 50 | 25 | 25 | | 4 | B |
| S 100 200U | S 100 200L | 100 | 200 | 20 | – | – | – | – | 150 | 50 | 25 | 25 | | 4 | B |
| S 100 250U | S 100 250L | 100 | 250 | 20 | – | – | – | – | 200 | 50 | 25 | 25 | | 4 | B |
| S 125 150U | S 125 150L | 125 | 150 | 20 | – | – | – | – | 100 | 50 | 25 | 37.5 | | 4 | B |
| S 125 200U | S 125 200L | 125 | 200 | 20 | – | – | – | – | 150 | 50 | 25 | 37.5 | | 4 | B |
| S 125 250U | S 125 250L | 125 | 250 | 20 | – | – | – | – | 200 | 50 | 25 | 37.5 | | 4 | B |
| S 150 150U | S 150 150L | 150 | 150 | 20 | – | – | – | – | 100 | 100 | 25 | 25 | | 4 | B |
| S 150 200U | S 150 200L | 150 | 200 | 20 | – | – | – | – | 150 | 100 | 25 | 25 | | 4 | B |
| S 150 250U | S 150 250L | 150 | 250 | 20 | – | – | – | – | 200 | 100 | 25 | 25 | | 4 | B |

Flat-head machine screws (JIS B1101) are required for Thickness Type H. The product may be made to order with dimensions other than standard.

Bolt type

U

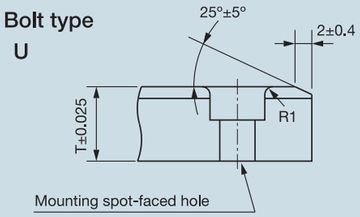


L

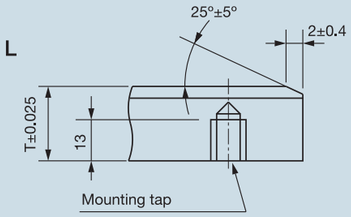

# THERMALLOY pillow unit
## (solid lubricant dispersed pillow unit)

Pb Free RoHS ELV



The pillow unit is a lubrication free, self-aligning bearing unit that comprises of an outer ring made from the high performance bearing material THERMALLOY and a stainless steel inner ring incorporated as a bearing into a stainless steel bearing box.

### Features

1.Can be used without a lubricant supply.
2.Can be used in water, seawater, vapour or water splashes.
3.Applicable within a wide temperature range.
4.Durable against intrusion of dust, sand or foreign bodies.
5.Suitable for use with rotary motion, vibratory motion, reciprocation and intermittent operation.
6.Able to move at extremely low speed compared with the solid lubricant embedded type and particularly superior with respect to minute motion.
7.Capable of withstanding higher loads and supporting radial and thrust loads.
8.Superior fretting resistance to that of embedded solid lubricant and ball bearing types.

### Construction and Components

| Part No. | Part name | Material |
|---|---|---|
| 1 | Bearing box | SCS13 (cast stainless steel) |
| 2 | Outer ring | 144SB12P (THERMALLOY) |
| 3 | Inner ring | SUS304 (stainless steel) |
| (Attached screws are also made of stainless steel.) | | |

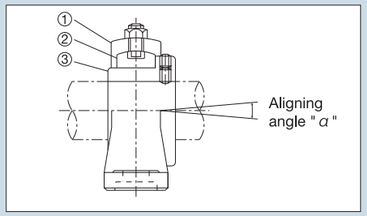


- Outer rings for standard units are made of 144SB12P (THERMALLOY), but may also be made of another bearing material.
- The pillow and diamond flange units and their components for shaft diameters between 20 and 50mm have been standardized. Please contact us if you require specifications other than those given above.

### Static Breaking Strength of Bearing Box

| Loading direction | | | |
|---|---|---|---|
| A | B | C | E |
| W×2 | W×2.5 | W×4 | W×1 |

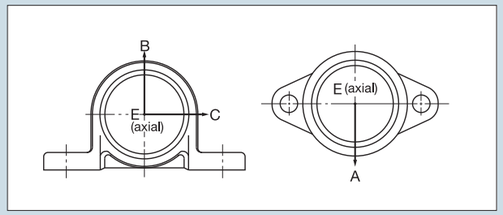


### Mounting in a Hot Place

If the shaft expands thermally (in the axial direction) at high temperatures it is recommended that the shaft be mounted as shown below.

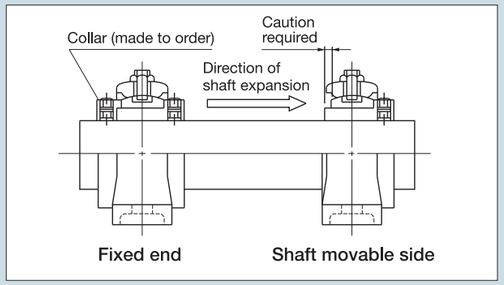


### Securing The Outer Ring For The Bearing

Tighten the set screw and nut in the following order.
1.Rotate the set screw until it makes contact with the bottom of the outer ring hole.
2.Rotate the set screw by 90° in the reverse direction to provide a clearance above the bottom of the hole.
3.Tighten the nut as shown in ②.

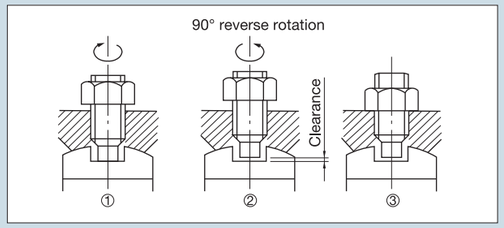


### Designing Conditions

#### Operating Ranges

| Shaft diameter | Nominal No. | Max. radial load "W" | Max. rotating speed "N" | Allowable "W-N" value | Operating temperature | Max. rotating speed "α" |
|---|---|---|---|---|---|---|
| mm | – | N{kgf} | rpm | N·rpm{kgf·rpm} | °C | Degrees |
| 20 | 204 | 9,800{1,000} | 150 | $3.12\times10^5$\{31,800\} | -50 – +200 | 7 |
| 25 | 205 | 11,800{1,200} | 120 | $3.43\times10^5$\{35,000\} | | 6 |
| 30 | 206 | 16,700{1,700} | 100 | $3.90\times10^5$\{39,800\} | | 7 |
| 35 | 207 | 20,600{2,100} | 90 | $4.21\times10^5$\{43,000\} | | 7 |
| 40 | 208 | 24,500{2,500} | 80 | $4.53\times10^5$\{46,200\} | | 6 |
| 45 | 209 | 27,500{2,800} | 70 | $4.53\times10^5$\{46,200\} | | 6 |
| 50 | 210 | 30,400{3,100} | 70 | $4.68\times10^5$\{47,700\} | | 6 |

- The "W," "N" and "W-N" values are measured in the air at an ordinary temperature without a lubricant supply.
- When using the unit at temperatures above 100°C as a guide the "N" and "W-N" values should be half of that of the service range.
- When the unit is used with a lubricant, a smaller load, at lower speed, operated intermittently or for a shorter time it may be used above the service range. Please consult us.
- When the unit is to be used out of the specified service range or in a special atmosphere (in a vacuum, gas or chemical solution), it may be made from other materials. Please consult us.
- Bearing boxes made of gray cast iron (FC) are also available.

### Service Life

The service life of the THERMALLOY pillow unit is generally determined by the wear to the inside diameter of the THERMALLOY. The wear greatly depends on the conditions of use. In other words it is affected by many factors including load, rotating speed, temperature, lubrication status, atmosphere and intrusion of foreign particles, so it is very difficult to calculate with a formula. Use the test data shown on the right as a reference when designing the THERMALLOY pillow unit.

< Test conditions >
Test method : DIN50321
Speed : 0.6m/min (constant shaft speed)
Temperature: Room temperature (in the air)
Lubrication : Dry

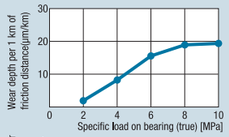


< Test conditions >
Test method : DIN50321
Specific load (true): 2MPa [20kg/cm2] (constant shaft speed)
Temperature : Room temperature (in the air)
Lubrication : Dry

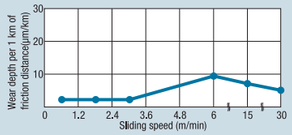


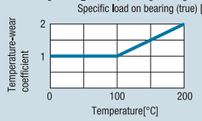


Example: The wear depth per 1 km of friction distance at a specific load of 2MPa [20kg/cm2], a speed of 3m/min and a temperature of 150°C without a lubricant supply can be approximated as follows:
Wear depth / friction distance = 2μm/km×1.5
= 3μm/km

# Dimensions of Bearings for units

Designation of Part Number

UD2○○T1

**UD2 04 T1**

Please specify by part number.

(Round hole type, diameter series 2)

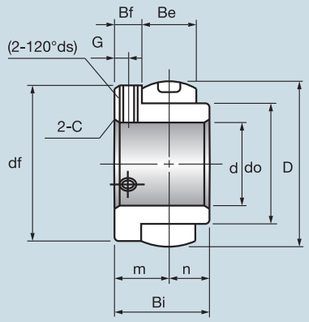


Pb Free

RoHS

ELV

(Unit: mm)

| Part No. of bearing | Dimensions | | | | | | | | | | | |
|---|---|---|---|---|---|---|---|---|---|---|---|---|
| | d | D | do | Be | Bi | n | m | c | df | Bf | G | ds |
| UD204T1 | 20 | 47 | 33 | 20 | 31 | 12.7 | 18.3 | 1.5 | 43 | 8.3 | 4 | M5×0.8 |
| UD205T1 | 25 | 52 | 38 | 22 | 34 | 14.3 | 19.7 | 1.5 | 48 | 8.7 | 4.5 | M5×0.8 |
| UD206T1 | 30 | 62 | 46 | 25 | 38.1 | 15.9 | 22.2 | 1.5 | 58 | 9.7 | 5 | M6×1 |
| UD207T1 | 35 | 72 | 53 | 27 | 42.9 | 17.5 | 25.4 | 2 | 68 | 11.9 | 6 | M8×1.25 |
| UD208T1 | 40 | 80 | 60 | 29 | 49.2 | 19 | 30.2 | 2 | 75 | 15.7 | 8 | M8×1.25 |
| UD209T1 | 45 | 85 | 65 | 29 | 49.2 | 19 | 30.2 | 2 | 80 | 15.7 | 8 | M8×1.25 |
| UD210T1 | 50 | 90 | 70 | 30 | 51.6 | 19 | 32.6 | 2 | 85 | 17.6 | 9 | M10×1.5 |

Bearings with specifications and dimensions other than those given above are also available. Please consult us.

# Dimensions of pillow units

Designation of Part Number

UDSP2○○S1T1

**UDSP2 04 S1T1**

Please specify by part number.

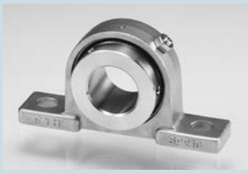

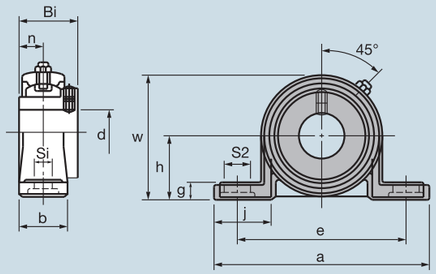


Pb Free

RoHS

ELV

(Unit: mm)

| Part No. of bearing | Dimensions | | | | | | | | | | | | Nominal size of mounting bolt | Part No. of bearing | Part No. of bearing box |
|---|---|---|---|---|---|---|---|---|---|---|---|---|---|---|---|
| | d | h | a | e | b | S1 | S2 | g | w | j | Bi | n | | | |
| UDSP204S1T1 | 20 | 33.3 | 127 | 95 | 30 | 13 | 19 | 9 | 64 | 39 | 31 | 12.7 | M10 | UD204T1 | SP204S1 |
| UDSP205S1T1 | 25 | 36.5 | 140 | 105 | 30 | 13 | 19 | 10 | 70 | 42 | 34 | 14.3 | M10 | UD205T1 | SP205S1 |
| UDSP206S1T1 | 30 | 42.9 | 165 | 121 | 36 | 17 | 21 | 11 | 82 | 50 | 38.1 | 15.9 | M14 | UD206T1 | SP206S1 |
| UDSP207S1T1 | 35 | 47.6 | 167 | 127 | 38 | 17 | 21 | 12 | 92 | 46 | 42.9 | 17.5 | M14 | UD207T1 | SP207S1 |
| UDSP208S1T1 | 40 | 49.2 | 184 | 137 | 40 | 17 | 21 | 12 | 98 | 50 | 49.2 | 19 | M14 | UD208T1 | SP208S1 |
| UDSP209S1T1 | 45 | 54 | 190 | 146 | 40 | 17 | 21 | 13 | 105 | 50 | 49.2 | 19 | M14 | UD209T1 | SP209S1 |
| UDSP210S1T1 | 50 | 57.2 | 206 | 159 | 45 | 20 | 22 | 14 | 112 | 56 | 51.6 | 19 | M16 | UD210T1 | SP210S1 |

Bearings with specifications and dimensions other than those given above are also available. Please consult us.



# Dimensions of Diamond Flange units

Designation of Part Number

UDSFL2○○S1T1

**UDSFL2 04 S1T1**

Please specify by part number.

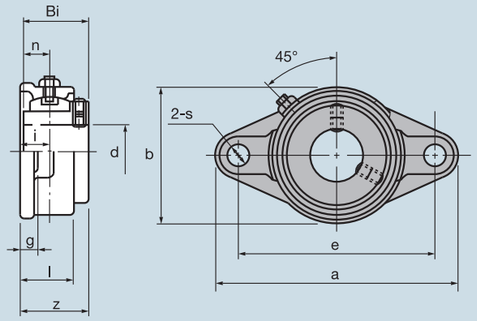


Pb Free

RoHS

ELV

(Unit: mm)

| Part No. of bearing | Dimensions | | | | | | | | | | | Nominal size of mounting bolt | Part No. of bearing | Part No. of bearing box |
|---|---|---|---|---|---|---|---|---|---|---|---|---|---|---|
| | d | a | e | i | g | l | S | b | Z | Bi | n | | | |
| UDSFL204S1T1 | 20 | 113 | 90 | 15 | 10 | 25.5 | 12 | 60 | 33.3 | 31 | 12.7 | M10 | UD204T1 | SFL204S1 |
| UDSFL205S1T1 | 25 | 130 | 99 | 16 | 10 | 27 | 16 | 68 | 35.7 | 34 | 14.3 | M14 | UD205T1 | SFL205S1 |
| UDSFL206S1T1 | 30 | 148 | 117 | 18 | 10 | 31 | 16 | 80 | 40.2 | 38.1 | 15.9 | M14 | UD206T1 | SFL206S1 |
| UDSFL207S1T1 | 35 | 161 | 130 | 19 | 11 | 34 | 16 | 90 | 44.4 | 42.9 | 17.5 | M14 | UD207T1 | SFL207S1 |
| UDSFL208S1T1 | 40 | 175 | 144 | 21 | 11 | 36 | 16 | 100 | 51.2 | 49.2 | 19 | M14 | UD208T1 | SFL208S1 |
| UDSFL209S1T1 | 45 | 188 | 148 | 22 | 13 | 38 | 19 | 108 | 52.2 | 49.2 | 19 | M16 | UD209T1 | SFL209S1 |
| UDSFL210S1T1 | 50 | 197 | 157 | 22 | 13 | 40 | 19 | 115 | 54.6 | 51.6 | 19 | M16 | UD210T1 | SFL210S1 |

Bearings with specifications and dimensions other than those given above are also available. Please consult us.